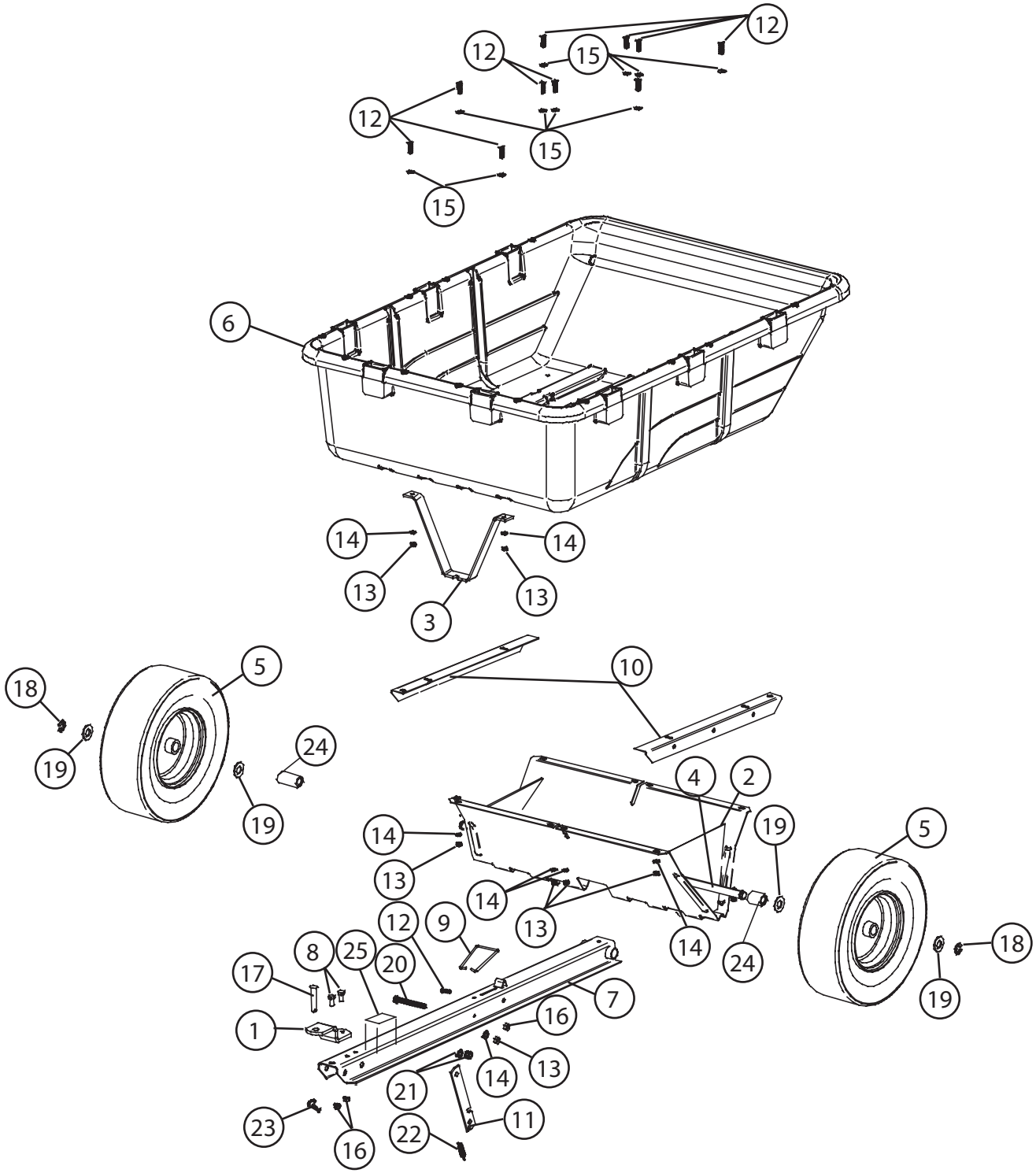EXPLODED REFERENCE