SINCE 1839
BRINLY

OWNER'S MANUAL

40" LAWN AERATOR

MODEL:

SA-400BH

- Assembly
- Installation
- Operation
- Repair Parts

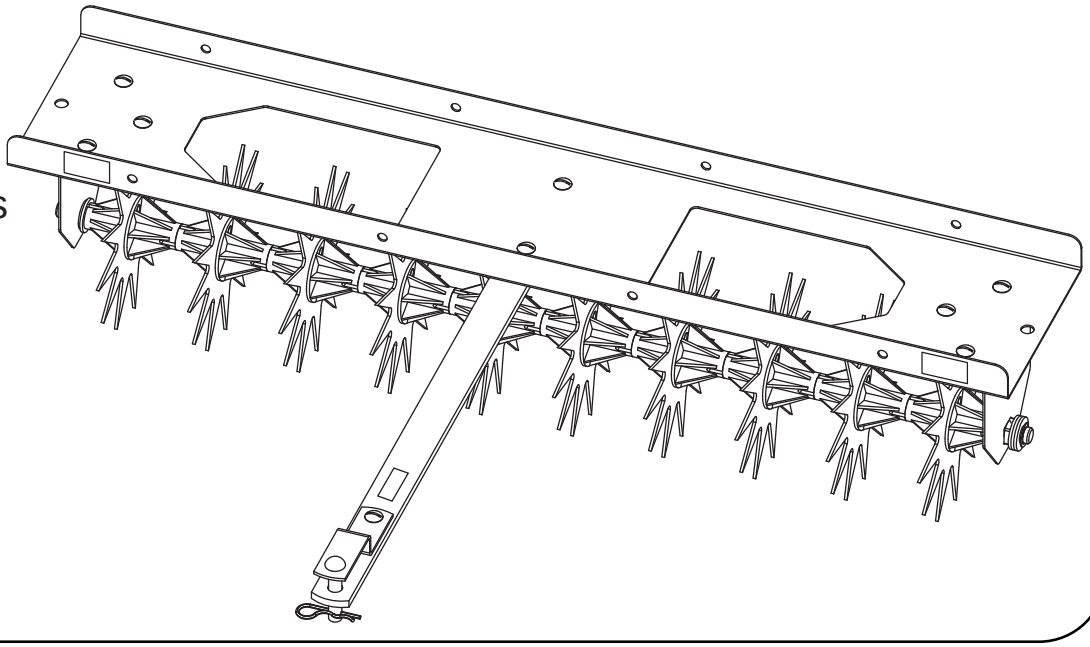

Original Instructions

For the latest product updates & setup tips:

Visit us on the web!
www.brinly.com

Important: This manual contains information for the safety of persons and property. Read it carefully before assembly and operation of the equipment!

1008590BH-C

INTRODUCTION AND SAFETY

CONGRATULATIONS on the purchase of your new Brinly-Hardy Aerator! Your Aerator has been designed, engineered and manufactured to give you the best possible dependability and performance.

Should you experience any problem you cannot easily remedy, please do not hesitate to contact our knowledgeable customer service department toll-free at 1-877-728-8224. We have competent, well trained technicians to help you with the assembly and use of your Aerator.

CUSTOMER RESPONSIBILITIES

Please read and retain this manual. The instructions will enable you to assemble and maintain your Aerator properly.

Please carefully read and observe the SAFETY section of this manual.

Follow a regular schedule in maintaining and caring-for your Brinly-Hardy Aerator.

TABLE OF CONTENTS

SAFETY..... 2
COMPONENT VIEW AND REFERENCE LIST..... 3
ASSEMBLY 4-5
OPERATION..... 6
MAINTENANCE - STORAGE..... 7
WARRANTY INFORMATION 8

SAFETY

SAFETY LABELS AND NOTATION

This symbol will help to point out important safety precautions throughout this manual. It means - ATTENTION! BECOME ALERT! your safety is involved.

B-7063 (Not to Scale)

B-3922 (Not to Scale)

The safety labels shown in this section are placed in important areas on your product to draw attention to potential safety hazards.

On your product's safety labels, the words DANGER, WARNING and CAUTION are used with the safety-alert symbol. DANGER identifies the most serious hazards.

The operator's manual also explains any potential safety hazards whenever necessary in special safety messages that are identified with the word, CAUTION, and the safety-alert symbol.

GENERAL NOTES (OPERATION)

- Use this attachment for intended purpose only.
- Before you operate any feature of this attachment or towing vehicle, observe your surroundings and look for bystanders.
- This attachment is intended for use in lawn care and home applications. Do not tow behind a vehicle on a highway or in any high speed applications. Do not tow at speeds higher than the maximum recommended towing speed.
- Towing speed should always be slow enough to maintain control. Travel slowly over rough terrain. Avoid holes, rocks and roots. Slow down before turning.
- Do not exceed the maximum towing capacity of your towing vehicle.
- Do not tow this product behind a motor vehicle such as a car, truck or ATV. Towing this product behind a ZTR (Zero Turn Radius) mower can affect the stability of the mower and is not recommended.
  Additionally, towing this product behind a ZTR mower is not recommended due to the speed and sharp turning ability the ZTR. Damage to this product or ZTR may result.
- Know your towing vehicle controls and how to stop safely, READ YOUR OWNER'S MANUAL before operating.
- Check the towing vehicle brake action before you operate. Adjust or service brakes as necessary.
- Do not allow children to operate the towing vehicle. Do not allow adults to operate the towing vehicle without proper instruction or without having read the owner's manual.
- Always wear substantial footwear. Do not wear loose fitting clothing that can get caught in moving parts.
- Keep your eyes and mind on your towing vehicle, attachment and area being covered. Do not let other interests distract you.
- Stay alert for holes and other hidden hazards in the terrain.
- The towing vehicle and attachment should be stopped and inspected for damage after striking a foreign object. Any damage should be repaired before restarting and operating the equipment.
- Do not drive close to creeks, ditches and public highways.
- Watch out for traffic when crossing near roadways.
- Keep the towing vehicle and attachment in good operating condition and keep safety devices in place.
- Keep all parts in good condition and properly installed. Fix damaged parts immediately. Replace worn or broken parts. Replace all worn or damaged safety and instruction decals. Keep all nuts, bolts and screws tight.
- Do not modify the attachment or safety devices. Unauthorized modifications to the towing vehicle or attachment may impair its function or safety, and it will void the warranty.

TOWING VEHICLE AND TOWING SAFELY

- Read the safety operating precautions in your towing vehicle operator's manual for additional safety information.
- Stopping distance increases with speed and weight of towed load. Travel slowly and allow extra time and distance to stop. Total towed weight must not exceed limits specified in towing vehicle operator's manual.
- Excessive towed load can cause loss of traction and loss of control on slopes. Reduce towed weight when operating on slopes.
- Use only approved hitches. Tow this attachment only with a towing vehicle that has a hitch designed for towing. Do not connect this attachment except at the approved hitch point.
- Follow the towing vehicle manufacturer's recommendations for weight limits for towed equipment and towing on slopes. Use counterweights or wheel weights as described in the towing vehicle operator's manual.
- Slow down before you turn and do not turn sharply. Use additional caution when turning or operating under adverse surface conditions.
- When reversing, carefully back-up straight to avoid jack-knifing. Do not allow the towing vehicle's wheels to contact the attachment drawbar. Damage could result.
- Do not shift to neutral and coast downhill.

PROTECT THOSE AROUND YOU

- Keep children, bystanders and pets at a safe distance away while operating this or any attachment.
- Use care when reversing. Before you back up, look carefully behind for bystanders.
- Before you operate any feature of this attachment or towing vehicle, observe your surroundings and look for bystanders.

KEEP RIDERS OFF TOWED ATTACHMENT AND TOWING VEHICLE

- Do not carry passengers.
- Do not let anyone, especially children, ride in/on this attachment, the towing vehicle or hitch bracket. Riders are subject to injury such as being struck by foreign object and/or being thrown off during sudden starts, stops and turns. Riders may also obstruct the operator's view resulting in this attachment being operated in an unsafe manner.

PARTS REFERENCE

Tools Required:
(1) Flat Head Screwdriver
(1) 1/2" Wrench
(1) Set of Pliers or Hammer
(1) Pair of Gloves.

INSTALLATION QUESTIONS?
MISSING PARTS?
REPLACEMENT PARTS?
DON'T GO BACK TO THE STORE!
Please call our Customer Service Department Toll-Free at 877.728.8224 or www.customerservice@brinly.com

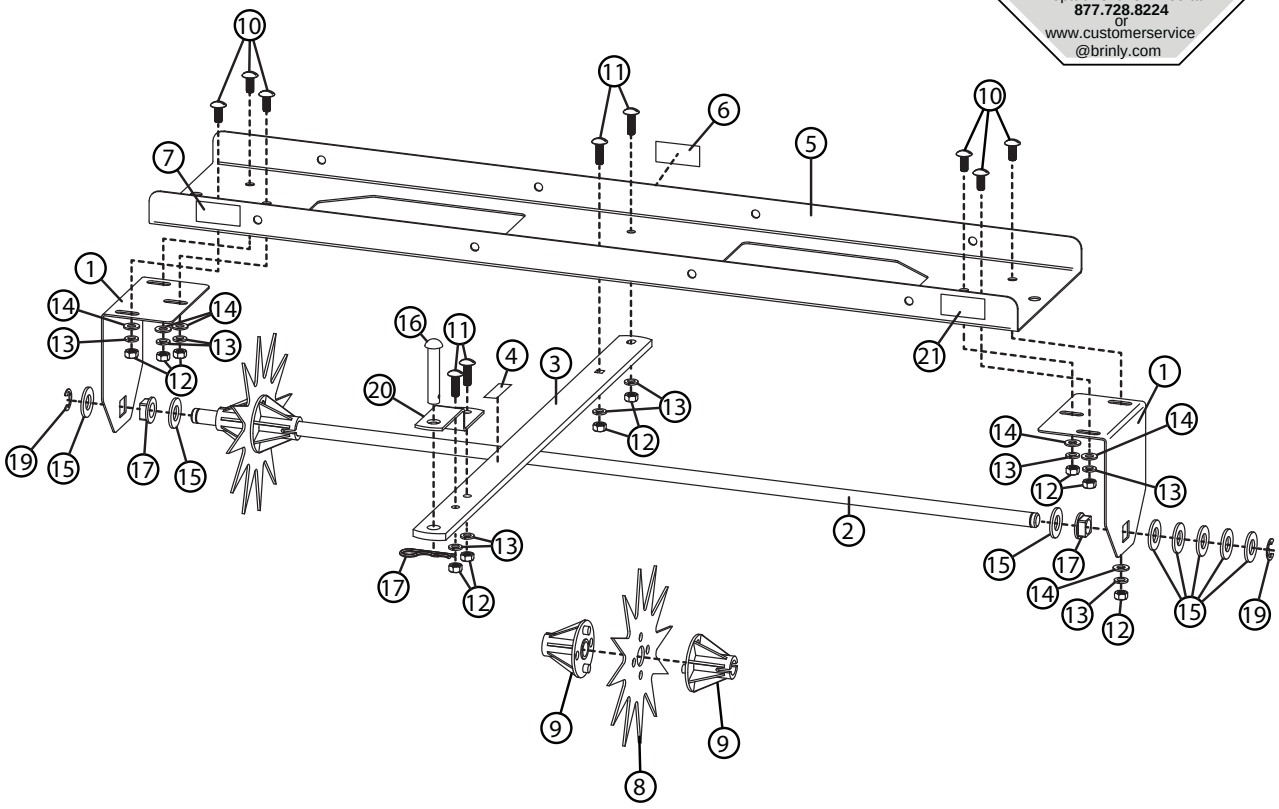

REF	PART NO.	DESCRIPTION	QTY
1	1008490-10	End Panel	2
2	1008491	Tine Shaft	1
3	B-3593-10	Drawbar	1
4	B-3922	Caution Aerator Decal	1
5	1008489-10	Tray	1
6	1008563	BH Logo Decal	1
7	B-7063	Pictorial Caution Label	1
8	B-5423	Tine	10
9	B-5425	Bearing	20
10	20M1012P	Round Head Screw, 5/16" X 3/4"	6
11	20M1016P	Round Head Screw, 5/16" X 1"	4
12	30M1000P	Hex Nut, 5/16"	10
13	40M1000P	Lock Washer, 5/16"	10
14	45M1111P	Flat Washer, 5/16"	6
15	45M2121P	Flat Washer, 5/8"	8
16	B-3861	Hitch Pin, 1/2" X 2-1/2"	1
17	B-6270	Square Bearing	2
18	D-146P	Hairpin Cotter, 1/8"	1
19	F-577	E Ring, 5/8"	2
20	R-821-10	Clevis	1
21	L-1744	Serial No Label	1

ASSEMBLY

1. Install Drawbar (3) to the Tray (5) using two 5/16" X 1" Round Head Screws (11), two 5/16" Lock Washers (13), and two 5/16" Hex Nuts (12) as shown in Figure 1.

2. Assemble the Clevis Drawbar (20) to the Drawbar (3) using two 5/16" X 1" Round Head Screws (11), two 5/16" Lock Washers (13), and two 5/16" Hex Nuts (12). See Figure 1.

   NOTE: Install Clevis (20) in direction shown.

Figure 1

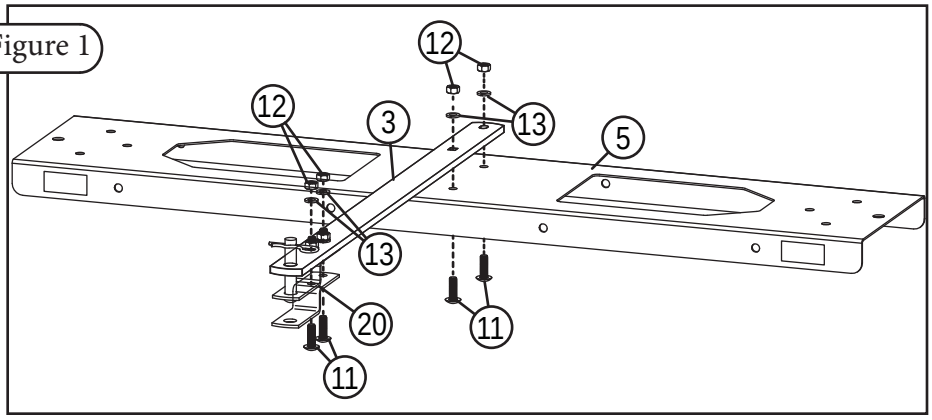

3. Install the two End Panels (1) to the Tray (5) using six 5/16" X 3/4" Round Head Screws (10), six 5/16" Flat Washers (14), six 5/16" Lock Washers (13), and six 5/16" Hex Nuts (12). See Figure 2.

   NOTE: Leave nuts loose in this step so that the End Panels can be adjusted later.

Figure 2

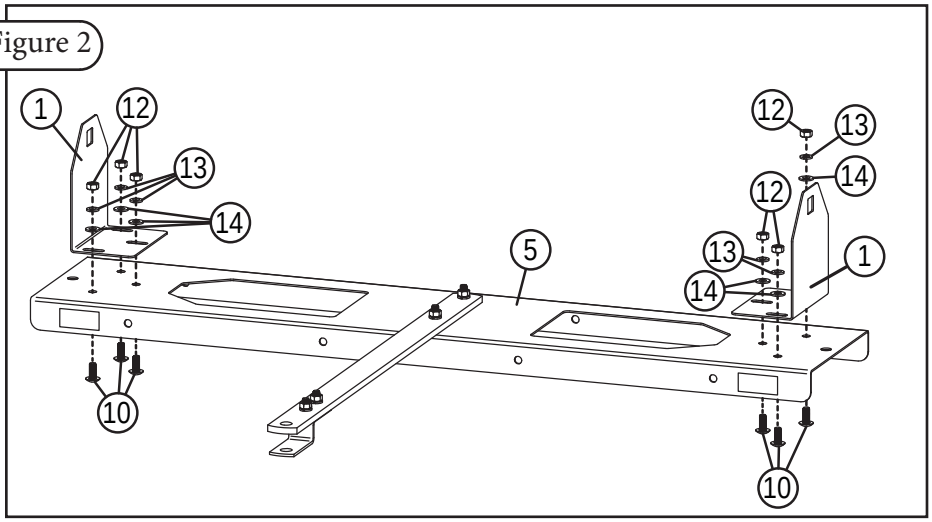

4. Fasten an E Ring (19) onto the Tine Shaft (2) and place a 5/8" Flat Washer (15) onto the Tine Shaft, see Figure 3. Push the shaft through one End Panel (1).

5. Place a Square Bearing (17) and then a 5/8" Flat Washer (15) onto the Tine Shaft, see Figure 3.

Figure 3

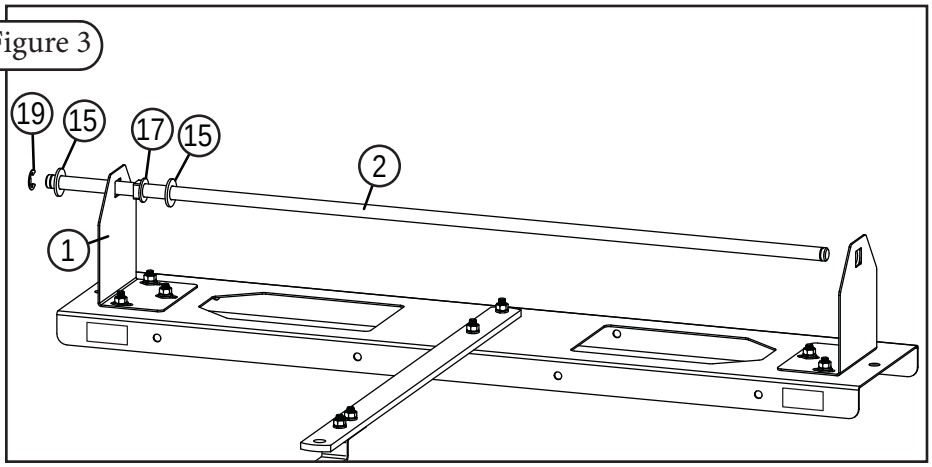

ASSEMBLY

CAUTION: Gloves are required when handling aerator tines. Tines have extremely sharp points. Use caution when handling.

6. Position the 10 Tines (8) and 20 Bearings (9) onto the Tine Shaft as follows:
   * Bearing (9), small end first
   * Tine (8)
   * Bearing (9), large end first

   See Figure 4.

   NOTE: Round projections on Bearings (9) must fit into holes in Tines (8) and into two holes of opposite Bearing.

7. Place a 5/8" Flat Washer (15) and then a Square Bearing (17) onto the Tine Shaft between the last bearing and the End Panel, and Push the Square Bearing into the hole on the End Plate, see Figure 4.

Figure 4

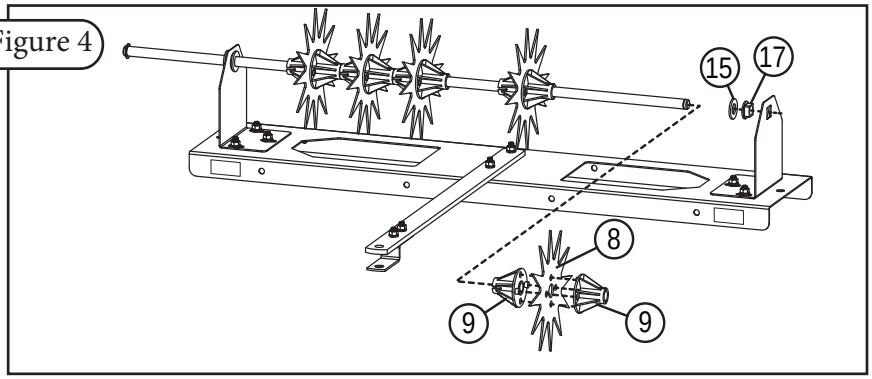

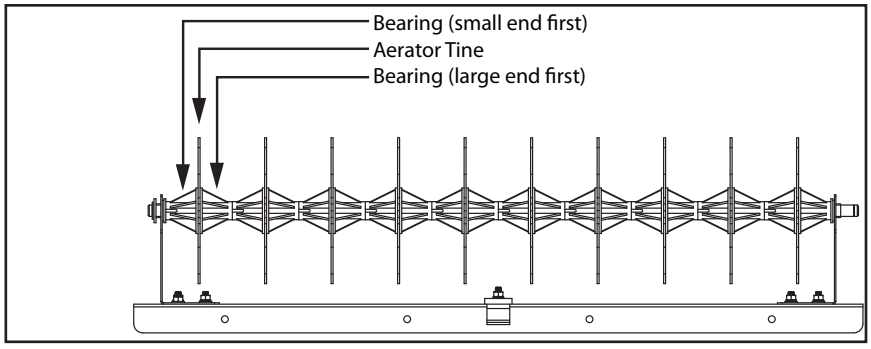

CAUTION: Gloves are required when tightening End Panel Bolts. Tines have extremely sharp points. Use caution when working around them.

8. Push the End Panels (1) toward the Tines (8) until there is no free play along the Tine Shaft and tighten the nuts (A) on the End Panels. See Figure 6, 6 nuts total.

   NOTE: The Square Bearings must be completely inserted into the End Panels before you tighten the nuts.

9. Push the end of the Tine Shaft with the fastened E Ring all the way towards the End Panel. Add as many 5/8" Flat Washers (15) to the opposite end of the shaft as necessary to eliminate extra space. Fasten the remaining E ring on the end of the Tine Shaft.

   NOTE: Store extra Flat Washers in a safe location. You may need them for maintenance of End Panel Adjustment.

Figure 5

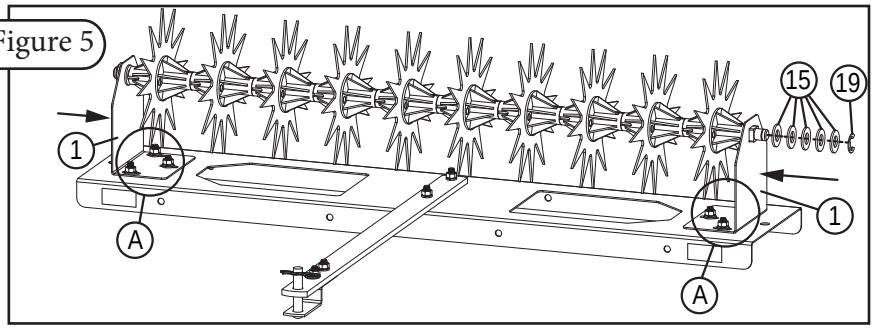

OPERATION

Figure 6

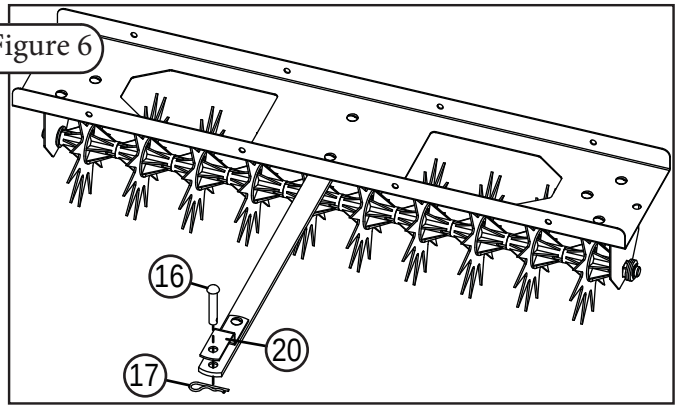

CAUTION: Avoid injury! Make sure feet and hands are clear of Tine Tips.

INSTALLING YOUR AERATOR

1. Park towing vehicle safely and set the parking brake (see towing vehicle operator's manual).
2. Align Aerator Clevis (20) with towing machine hitch plate.
3. Install Hitch Pin (16) through Clevis (20) and towing machine hitch plate. Secure Hitch Pin (16) with Hairpin Cotter (17).

REMOVING YOUR AERATOR

CAUTION: Keep body parts away from under drawbar. Do not attempt to disconnect Aerator from towing vehicle with weight on the tray.

1. Park towing vehicle safely and set the parking brake (see towing vehicle operator's manual).
2. Unload weight from Aerator tray.
3. Remove Hairpin Cotter (17) and Hitch Pin (16).
4. Push Aerator away from the towing vehicle.
5. Install Hitch Pin (16) and Hairpin Cotter (17) for storage.

USAGE

CAUTION: Avoid injury! Avoid damage to tines. Do not tow the aerator across concrete or asphalt driveways and walkways.

CAUTION: Excessive towed load can cause loss of control on slopes. Stopping distance increases with speed and the weight of the towed load.

CAUTION: Total towed weight must not exceed combined weight of towing vehicle, ballast and operator.

AERATOR WEIGHT

The following maximum loaded weight capacity is the weight of the Aerator plus the maximum weight loaded into the Aerator Tray:

Model	Weight
SAT-400BH	25 lbs (empty)
Maximum Tray Weight	110 lbs
Maximum Towed Weight	135 lbs

DEPTH / PENETRATION OF TINES

CAUTION: Avoid injury! Openings in Tray allow access to Tines for cleaning and service. Excercise caution when working around Tray openings and avoid placing body parts into the openings.

Bagged weight material can fall through Tray Openings and be torn open or damaged by the Tines. Use solid weight or close Tray Openings with wood panel or by other suitable means.

Weight should be added to the tray after attaching to the towing vehicle. Weight should be secured by rope, straps, or other suitable means to contain the weight in the tray.

Maximum capacity of the Aerator Tray is 110 lbs.

Moderate soil moisture is important for proper tine penetration.
Extremely dry conditions will not permit tine penetration and may damage the tines.
Extremely wet conditions will cause full penetration of tines (up to tine bearings). This condition will cut slots in the turf.

Tray Openings allow access to Tines for cleaning and service only and are not to be used in any other application.

SPEED

The best operating speed is 3 mph or less.
Maximum operating speed is 5 mph.

FREQUENCY

Lawn aeration is not accomplished in a single pass. It will normally take several passes over the lawn. Alternating the direction by 90 degrees will improve the aeration effect.

The Aerator may be used in an independent operation or may be used when mowing your lawn.

MAINTENANCE-STORAGE

MAINTENANCE

The key to years of trouble-free service is to keep your Aerator clean and dry.

After the first 30 minutes of use, check all fasteners for tightness.
Thereafter, periodically check all fasteners for tightness.

Tines are manufactured with galvanized steel to resist wear of abrasive soil. Striking objects can cause Tines to curl or break. Contact Brinly-Hardy customer service department to purchase replacement Tines.

Apply a light coat of oil on tines after use to prevent rust.

For rust appearing on painted surfaces, sand lightly and paint affected area with enamel.

Periodically remove debris that builds up between Tines.

Apply lubricating oil at each tine bearing and axle bearing before use.

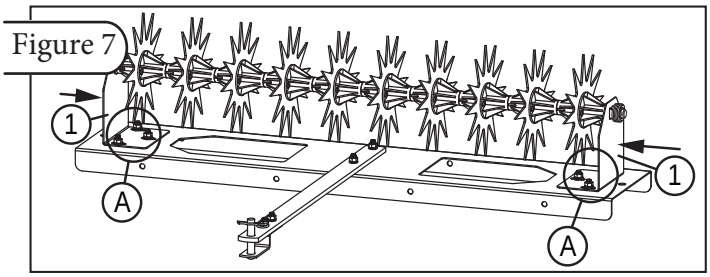

Figure 7

After use, the Tine and Tine Bearings may become loose on the Tine Shaft.
Should this occur, remove the looseness as follows (refer to Figure 7):

1. Loosen the End Panel nuts (A).
2. Push the End Panels (1) toward the Tines until there is no free play along the Tine Shaft.
3. Tighten the End Panel nuts (A).

NOTE: The Square Bearings must be completely inserted into the End Panels before you tighten the End Panel nuts (A).

STORAGE

CAUTION: Avoid injury! The Aerator Tines are very sharp. Care should be taken when choosing a storage location for this product.

Store Aerator in low traffic aisle ways.
Store Aerator with Tine points facing the wall or ground.
Store Aerator on the ground or low to the ground.
Do not store Aerator hanging from the wall, ceiling or with Tine points facing outward.
Product packaging can be used to offer a protective area around the Tines.
Drawbar is a trip hazard. Avoid leaving Drawbar in aisle ways and walking paths.

MANUFACTURER'S LIMITED WARRANTY
FOR

SINCE 1839
BRINLY

Pull Behind Accessories

The limited warranty set forth below is given by Brinly-Hardy Company with respect to new merchandise purchased and used in the United States, its possessions and territories.

Brinly-Hardy Company warrants the products listed below against defects in material and workmanship, and will at its option, repair or replace, free of charge, any part found to be defective in materials or workmanship. This limited warranty shall only apply if this product has been assembled, operated, and maintained in accordance with the Operator's manual furnished with the product, and has not been subject to misuse, abuse, commercial use, neglect, accident, improper maintenance, alteration, vandalism, theft, fire, water, or damage because of other peril or natural disaster.

Normal Wear Parts or components thereof are subject to separate terms as follows: All normal wear parts or component failures will be covered on the product for a period of 90 days.

Parts found to be defective within the warranty period will be replaced at our expense. Our obligation under this warranty is expressly limited to the replacement or repair, at our option, of parts found to be defective in material and workmanship.

HOW TO OBTAIN SERVICE: Warranty parts replacements are available, ONLY WITH PROOF OF PURCHASE, through our Pull Behind Accessories Customer Service Department. Call 877-728-8224.

This limited warranty does not provide coverage in the following cases:

a) Routine maintenance items such as lubricants and filters.
b) Normal deterioration of the exterior finish due to use or exposure.
c) Transportation and/or labor charges.
d) The warranty does not include rental use.

No implied warranty, including any implied warranty of merchantability of fitness for a particular purpose, applies after the applicable period of express written warranty above as to the part as identified below. No other express warranty whether written or oral, except as mentioned above, given by any person or entity, including a dealer or retailer, with respect to any product, shall bind Brinly-Hardy Co. During the period of the warranty, the exclusive remedy is repair or replacement of the product as set forth above.
The provisions as set forth in this warranty provide the sole and exclusive remedy arising from the sale. Brinly-Hardy Co. shall not be liable for incidental or consequential loss or damage including, without limitation, expenses incurred for substitute or replacement lawn care services or for rental expenses to temporarily replace a warranted product.

Some states do not allow the exclusion or limitation of incidental or consequential damages, or limitations on how long an implied warranty lasts, so the above exclusions or limitations may not apply to you.

During the warranty period, the exclusive remedy is replacement of the part. In no event shall recovery of any kind be greater that the amount of the purchase price of the product sold. Alteration of safety features of the product shall void this warranty. You assume the risk and liability for loss, damage, or injury to you and your property and/or to others and their property arising out of the misuse or inability to use this product.

This limited warranty shall not extend to anyone other than the original purchaser or to the person for whom it was purchased as a gift.

HOW STATE LAW RELATES TO THIS WARRANTY: This limited warranty gives you specific legal rights, and you may also have other rights which vary from state to state.

IMPORTANT: The Warranty period stated below begins with the PROOF OF PURCHASE. Without the proof of purchase, the Warranty period begins from the date of manufacture determined by the serial number manufacturing date.

WARRANTY PERIOD:
The warranty period for the product shown in this manual is as follows: Steel Frame Parts: consumer - 2 Years, commercial - 90 days. Tines are normal wear parts - 90 days.