Installation Questions?
Missing Parts?
Replacement Parts?

DON'T GO BACK TO THE STORE!

Please call Customer Service Department Toll Free 877.728.8224 or customerservice@brinly.com

Item	Description	Part #	Qty
1	Handle spacer	1007081	1
2	Carriage bolt, M6 x 25	1007082	1
3	Washer, M6	1007083	1
4	Gauge and lever assembly	1007084	1
5	Adjust handle assembly	1007085	1
6	Adjust handle knob side 1	1007086	1
7	Adjust handle knob side 2	1007087	1
8	Screw, M4 x 18	1007088	1
9	Handle spacer	1007089	1
10	Wing nut, M6	1007090	1
11	Bolt, M6 x 45	1007091	7
12	Nylon washer	1007092	1
13	Flat washer, M6, big	1007093	1
14	Screen	1007094	1
15	Handle cover	1007095	2
16	Hopper Assembly, Black*	1008017*	1
17	R pin, M2 diameter	1007097	1
18	Hopper bushing	1007098	1
19	Pivot and bracket assembly	1007099	1
20	Wheel frame tube	1007100	2
21	Nut, M6	1007101	2
22	End cover	1007102	2
23	Upper handle	1007103	2
24	Lock nut, M6	1007104	11
25	Control rod A	1007105	1
26	Handle shaft	1007106	1

Item	Description	Part #	Qty
27	Shut off plate	1007107	1
28	Flat washer, M4, big	1007108	3
29	Screw, M4 x 12	1007109	3
30	Frame	1007110	1
31	Frame brace	1007111	2
32	Bolt, M6 x 50	1007112	2
33	Bolt, M6 x 30	1007113	2
34	Flat washer, M16	1007114	1
35	End cap	1007115	2
36	Pneumatic wheel	1007116	2
37	Axle bushing	1007117	2
38	Axle bearing	1007118	2
39	Gearbox & axle assembly	1007119	1
40	2.9 x 28mm Cotter Pin, SS	1008031	1
41	Screw, M4 x 20	1007121	1
42	Impeller	1007122	1
43	Screw, M6 x 40	1007123	4
44	Hex locknut, M5	1007124	1
45	Cross brace	1007125	1
46	Adjust connect rod, B	1007126	1
47	Hex bolt, M5 x 45	1007127	1
48	Flat washer, M6	1007128	3
49	Cotter Pin, Small	1008098	2
50	Nylon Washer	1007531	4
51	Decal, Brinly	1008099	1

*Assembly includes Part Numbers 16, 18, 27, 28, 29

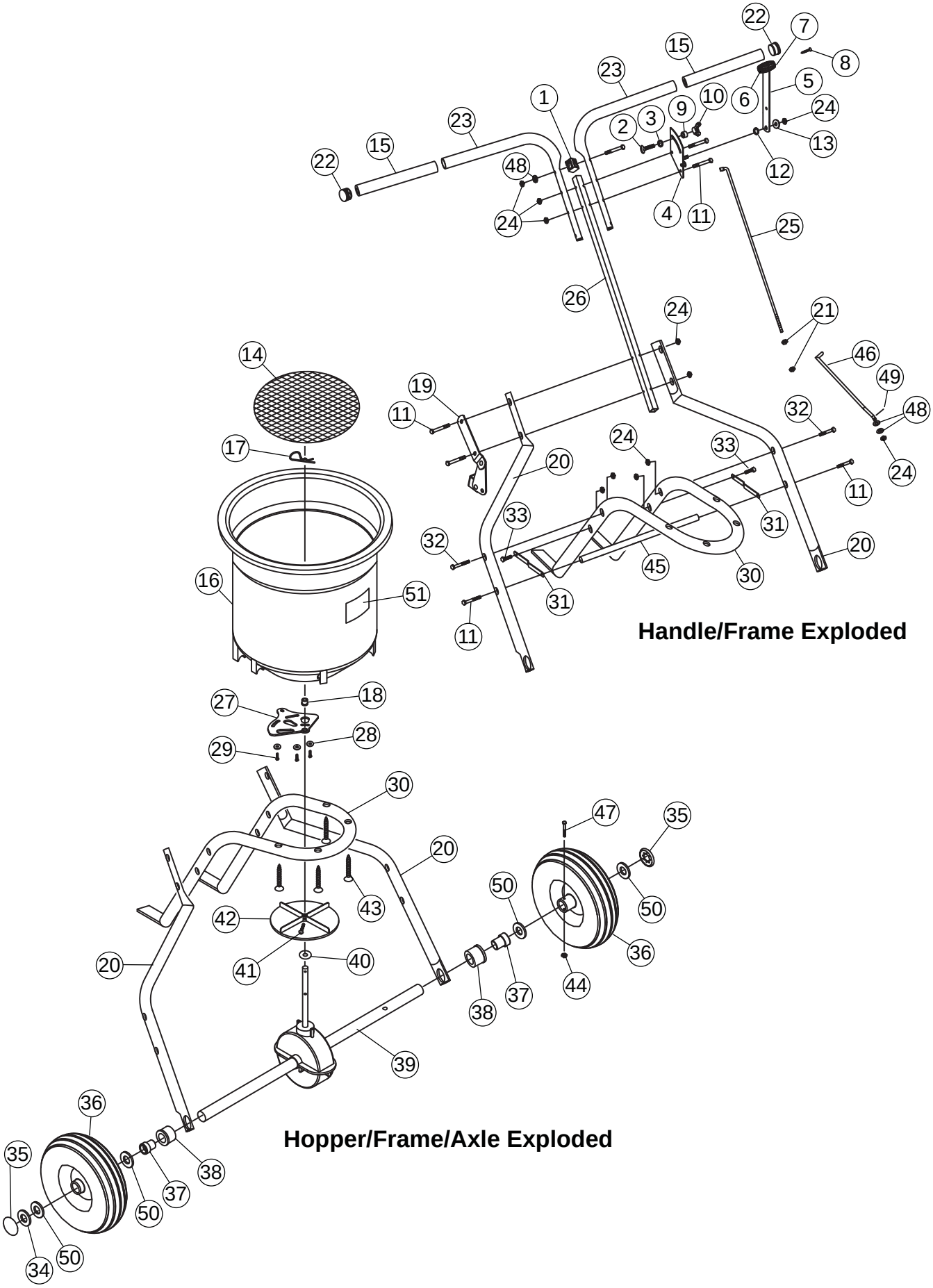
Handle/Frame Exploded
Hopper/Frame/Axle Exploded