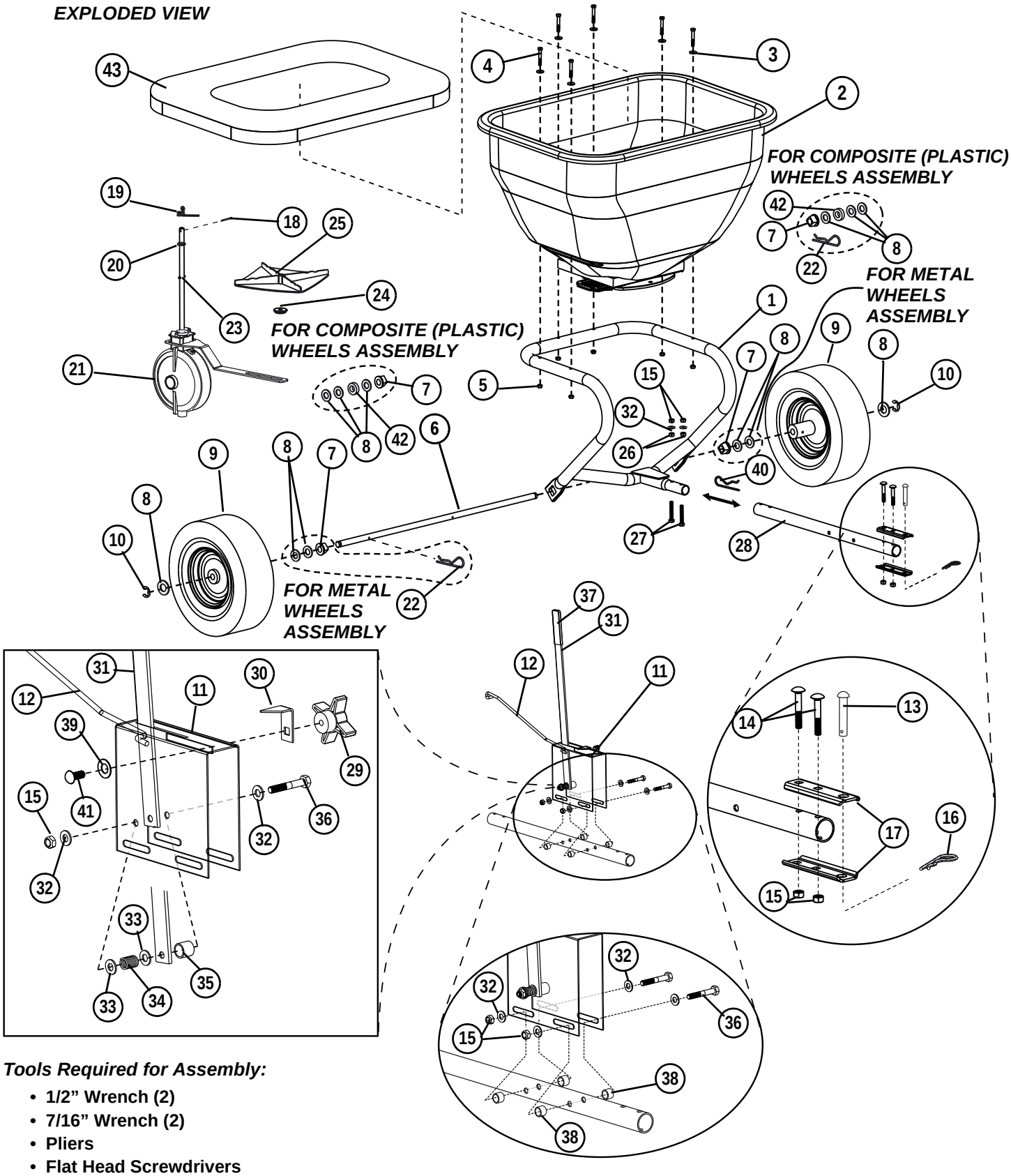

Tools Required for Assembly:

- **1/2” Wrench (2)**
- **7/16” Wrench (2)**
- **Pliers**
- **Flat Head Screwdrivers**

PARTS LIST

REF NO.	PART NO. BS-26BH	PART NO. BS-36BH	DESCRIPTION	QTY.
1.	F-1290-10	F-1029-10	Hopper Support	1
2.	F-1030	F-1031	Hopper	1*
3.	F-575	F-575	Washer, Thrust, 1/4”	6
4.	2M0828SS	2M0828SS	Bolt, Hex Stainless 1/4” x 1-3/4”	6
5.	B-4785	B-4785	Nylon Lock Nut 1/4”	6
6.	F-1013-01	F-1013-01	Axle, Plated	1
7.	F-283	F-283	Bearing, Axle	2
8.	45M2121P	45M2121P	Washer, Flat 5/8”	8
9.	F-705	F-705	Wheel, Pneumatic, Metal Rim	2
	1008774	1008774	Wheel, Pneumatic, Composite (Plastic) Rim	2
10.	F-577	F-577	‘E’ Ring, Snap, 5/8”	2
11.	F-1009-10	F-1009-10	Plate, Gauge	1
12.	F-1010	F-1010-01	Rod, Link	1
13.	B-3861	B-3861	Pin, Hitch 1/2” x 2-1/2”	1
14.	10M1032P	10M1032P	Bolt, Carriage 5/16” x 2"	2
15.	B-4786	B-4786	Nylon Lock Nut 5/16”	7
16.	D-146P	D-146P	Hairpin Cotter 1/8”	1
17.	R-892-10	R-892-10	Clevis	2
18.	50M0416P	50M0416P	Pin, Cotter 1/8” x 1"	1
19.	F-436	F-436	Spring, Agitator, SS	1
20.	F-365	F-365	O-Ring, 3/8” I.D. AS-110	1
21.	F-1015	F-1015	Transmission Assembly	1
22.	F-620	F-620	Hairpin Cotter, Special	1
23.	F-892	F-892	Pin, Spring	1
24.	F-591	F-591	Driver, Fan	1
25.	F-573	F-573	Fan	1
26.	30M1000P	30M1000P	Nut, Hex 5/16”-18	2
27.	2M1036P-FT	2M1036P-FT	Bolt, Hex 5/16” x 2-1/4”	2
28.	F-1023-10	F-1023-10	Tube, Tow	1
29.	F-782	F-782	Knob, 4 Prong, Black	1
30.	F-781-01	F-781-01	Handle, Stop	1
31.	F-1008-10	F-1008-10	Handle, Flow Control	1
32.	45M1111P	45M1111P	Washer, Flat 5/16”	8
33.	R-618	R-618	Washer, Special	2
34.	B-3805	B-3805	Spring	1
35.	B-3721	B-3721	Spacer, Latch	1
36.	2M1044P	2M1044P	Bolt, Hex 5/16” x 2-3/4”	3
37.	R-1882	R-1882	Grip, Flat	1
38.	F-1045	F-1045	Bushing, Pivot	4
39.	F-787	F-787	Washer, Crvd. Spring-Glv	1
40.	B-1002P	B-1002P	Hairpin, Cotter,.148 Dia	1
41.	11M1012P	11M1012P	Bolt, Carriage 5/16” x 3/4”	1
42.	1008378-01	1008378-01	Spacer	2
43.	1009191	1009191	Hopper Cover (If equipped)	1

* See Hopper Assembly parts list.

INSTALLATION QUESTIONS?

MISSING PARTS?

REPLACEMENT PARTS?

STOP

DON’T GO BACK TO THE STORE!

Please call our Customer Service Department Toll-Free at **877.728.8224** or email customerservice @brinly.com

To Order Parts Call:

877-728-8224

Visit us on the web:

www.brinly.com

HOPPER EXPLODED VIEW

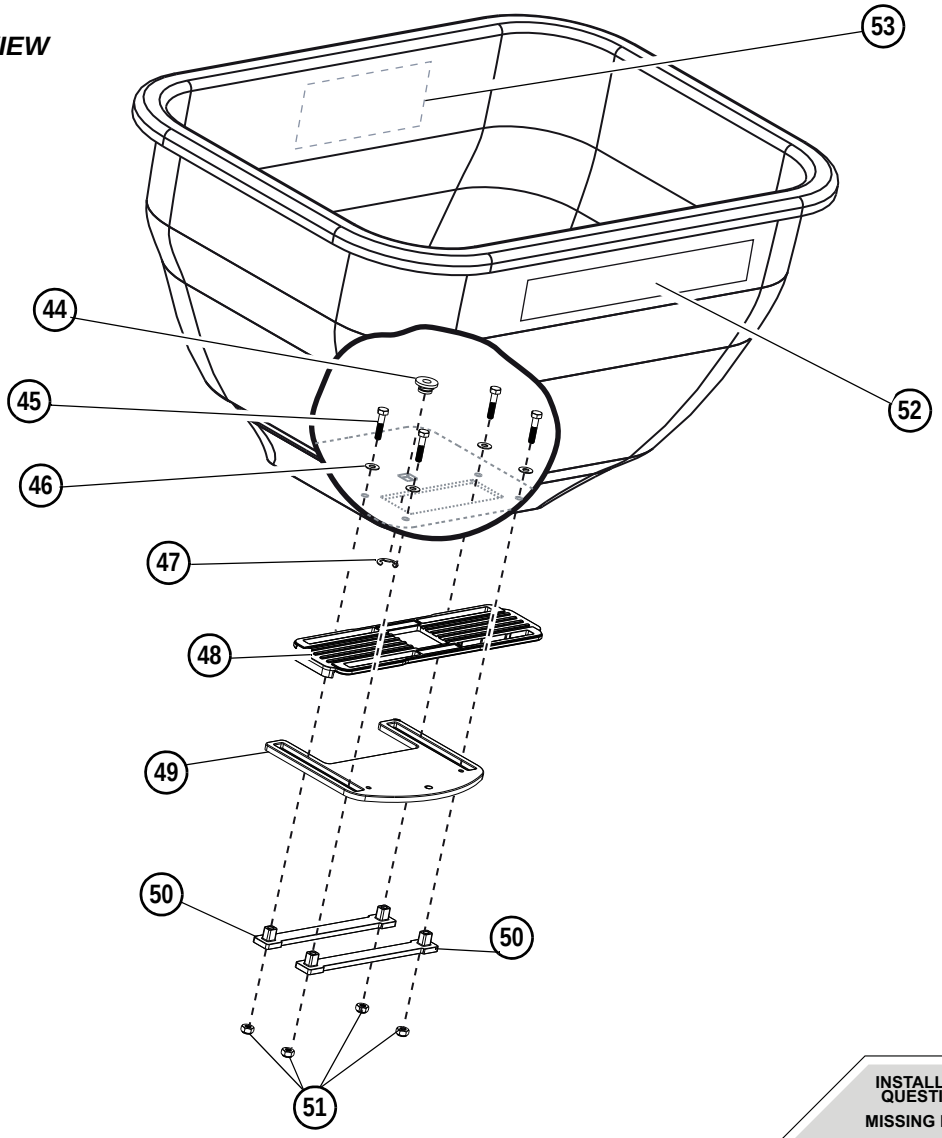

HOPPER PARTS LIST

REF NO.	PART NO. BS-26BH	PART NO. BS-36BH	DESCRIPTION	QTY.
44.	F-574	F-574	Bearing, Shaft	1
45.	2M0820SS	2M0820SS	Bolt, Hex 1/4”x1-1/4” SS	4
46.	45M0909SS	45M0909SS	Washer, Plain SS	4
47.	F-577	F-577	E-Ring, 5/8”	1
48.	B-7392	B-7392	Plate, Directional Control	1
49.	B-7391	B-7391	Gate	1
50.	B-7393	B-7393	Strap	2
51.	F-1026	F-1026	Nut, Hex Lock, 1/4”-20 SS	4
52.	F-1003	F-1003	Label, Calibration/Directional	1
53.	B-5924	B-5924	Decal, Logo	1

INSTALLATION QUESTIONS?
MISSING PARTS?
REPLACEMENT PARTS?

DON’T GO BACK TO THE STORE!

Please call our Customer Service Department Toll-Free at **877.728.8224** or email customerservice @brinly.com

To Order Parts Call:
877-728-8224
Visit us on the web:
www.brinly.com